novotechnik
Siedle Group

# NOVOHALL
# Angle Sensor
# touchless technology
# transmissive

## Series RFA4000
## analog

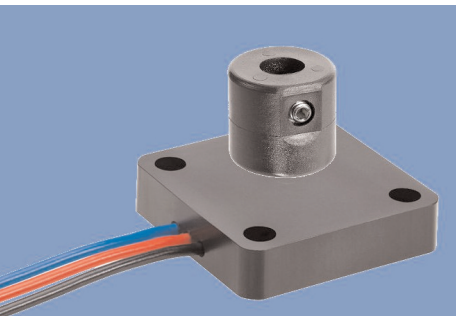

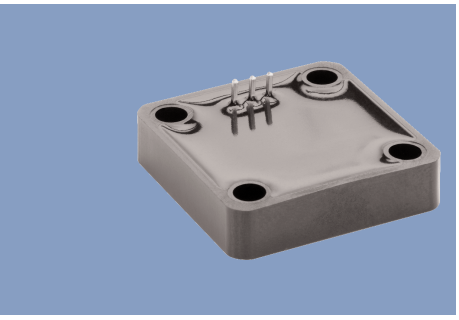

**Special features**

- touchless technology, magnetic measurement
- enables for transmissive measurements
- electrical range up to 360°
- simple mounting
- lateral magnet offset up to ±3 mm
- protection class IP67 / IP69k
- single and redundant versions
- unlimited mechanical lifetime
- resolution 12 bit
- independent linearity ±0.5 %
- very favourable price/performance ratio
- extremely flat design 30x30x7mm³

The sensor utilizes the orientation of a magnetic field for the determination of the measurement angle. Therefore, a magnet is attached to the rotating shaft. The magnetic field orientation is captured with an integrated circuit. An analogue output signal represents the calculated angle.

The extreme miniaturization of the sensor enables the application also in very small installation spaces. The housing is made of high grade temperature-resistant plastic material. The sensor is totally sealed and therefore is not sensitive to dust, dirt or moisture.

The two-part design of the sensor Series RFA and its position marker offers the customer maximal variability when mounting the sensor. The absence of shaft and bearing makes the assembly insensitive for customer application tolerances. Measurements can be made transmissively through various (non-magnetic) materials.

Electrical connection is made via lead wires.

| Description | |
|---|---|
| Housing | high grade, temperature resistant plastic |
| Electrical connections | lead wires AWG 20 (0.5 mm²)<br>alternative soldering pins for PCB mounting |

Dimensions one-channel version (model 600)

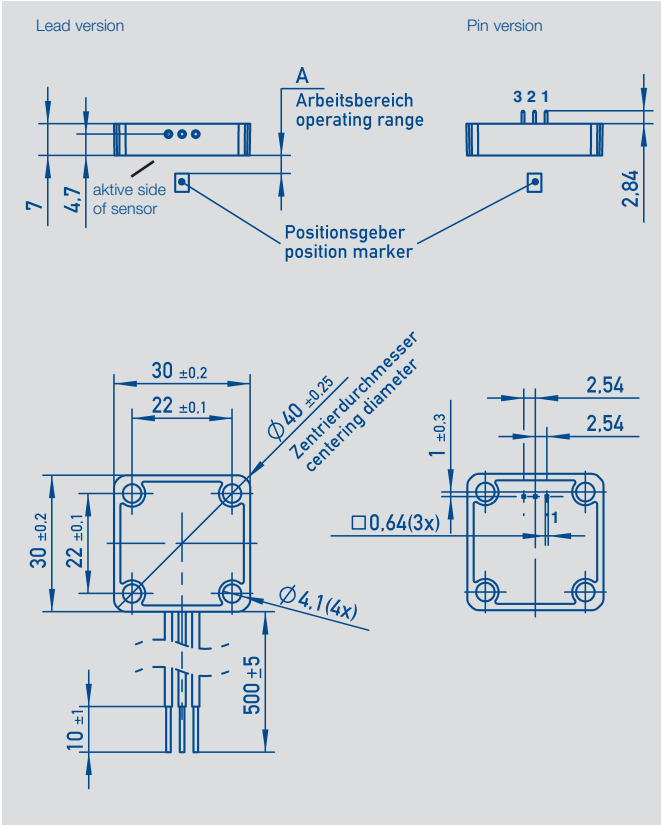


Dimensions multi-channel version (model 700)

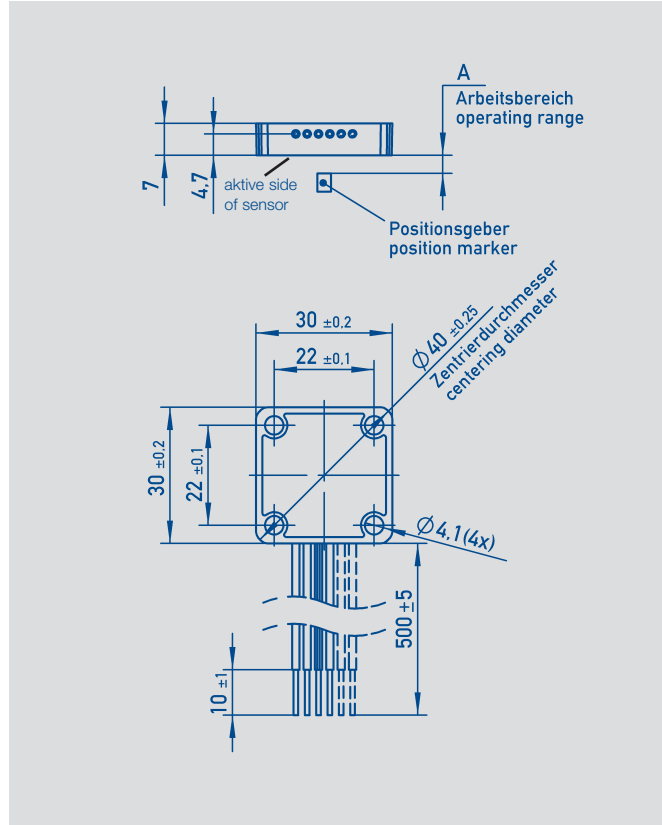


Wire colors / Pin assignment

| Signal | color | Pin No. |
|---|---|---|
| Supply voltage | Red | 2 |
| GND | Black | 3 |
| Signal output | Blue | 1 |

Wire colors assignment

| Signal | Color |
|---|---|
| Supply voltage | Red |
| GND | Black |
| Signal output | Blue |
| Supply voltage 2 | Red / white |
| GND 2 | Black / white |
| Signal output 2 | Blue / white |

## Output characteristic single (model 600)

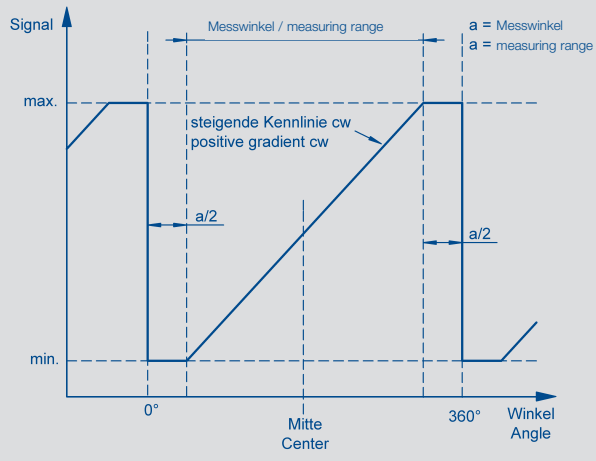


CW: With view on sensor through position marker

## Output characteristics redundant (model 700)

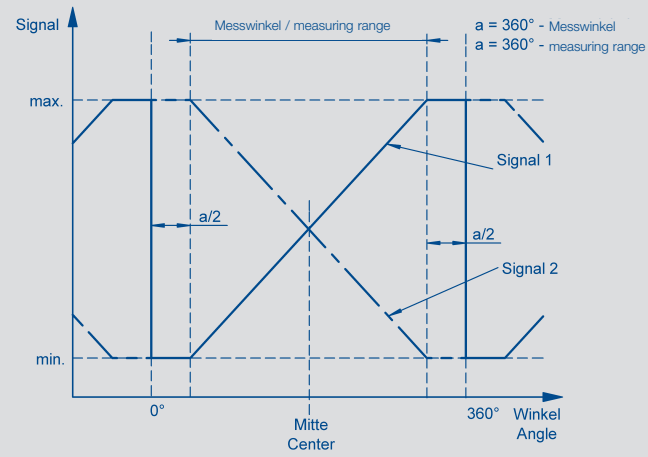


## Position marker examples

Position marker Z-RFC-P03

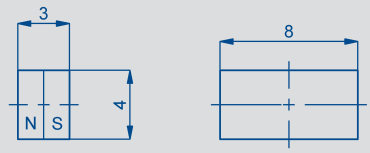


Position marker Z-RFC-P04

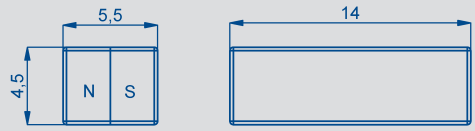


Position marker Z-RFC-P23

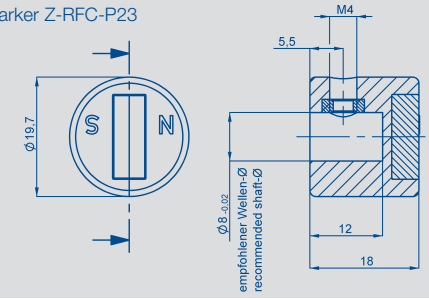


Technical Data and further position markers see separate data sheet.

| Type designations | RFA-4001- _ _ _ | |
|---|---|---|
| **Mechanical Data** | | |
| Dimensions | see dimension drawing | |
| Mounting | with 4 M4 screws (not included) | |
| Mechanical travel | 360 continuous | ° |
| Maximum operational speed | unlimited | $min^{-1}$ |
| Weight | ca. 10 | g |
| **Electrical Data** | | |
| Supply voltage Ub | 5 ±0.5 | VDC |
| No-load supply current | typ. 15 (typ. 8 on request) per channel | mA |
| Reverse voltage | yes, only supply lines | |
| Short circuit protection, vs. GND and +Ub | yes | |
| Measuring range | 0 ... 30 up to 0 ... 360, in 10° steps | ° |
| Number of channels | 1 / 2 | |
| Update rate | 5000 typ. | measur./s |
| Resolution | 12 bit | |
| Repeatability | 0.1 | ° |
| Independent linearity | ≤ 0.5 of signal range | % |
| Output signal | ratiometric to Ub<br>0.25 V ... 4.75 V<br>0.5 ... 4.5 V<br>(load ≥1 kΩ) | |
| TC at stroke angle 30 up to 170°<br>TC at stroke angle 180 up to 360° | typical 100<br>typical 50 | ppm/K<br>ppm/K |
| Insulation resistance (500 VDC) | ≥ 10 | MΩ |
| Cross-section lead wires | 0.5 | $mm^2$ |
| **Environmental Data** | | |
| Temperature range | -40...+125 | °C |
| Vibration (IEC 60068-2-6) | 5...2000<br>$A_{max}$ = 0.75<br>$a_{max}$ = 20 | Hz<br>mm<br>g |
| Shock (IEC 60068-2-27) | 100 (6 ms) | g |
| Life | mechanical unlimited | |
| MTTF | 424 (single)<br>330 (redundant with shared supply)<br>266 (fully redundant) | years<br>years<br>years |
| Protection class (DIN EN 60529) | IP67 / IP69k | |
| EMC compatibility | ISO 11452-2 Interference test in Absorber chamber<br>ISO 11452-5 Interference test Stripline<br>CISPR 25 Emitted interference<br>CISPR 25 Conducted emission<br>ISO 7637-1 Transients<br>ISO 10506 ESD components check<br>ISO 10605 ESD Handling & Packaging | |
| Working distance A / magnet constant | Z-RFC-P03: A = 2 ±1 mm / magnet constant = 1.85 [°/$mm^2$]<br>Z-RFC-P04: A = 4.5 ±1.7 mm / magnet constant = 0.8 [°/$mm^2$] | |
| Lateral magnet offset<br>(will cause additional linearity error) | max. ±3 mm (Z-RFC-P04), max. ±1.5 mm (Z-RFC-P03)<br>The maximum error which is caused by lateral offset between sensor and position marker may be approximated as follows:<br>Error [°] = magnet constant x ( offset [mm] )$^2$<br>The magnet constant depends from the position marker.<br>Example: Z-RFC-P04: magnet constant = 0.8 °/$mm^2$; offset = 0,5 mm<br>Error [°] = 0.8°/$mm^2$ x (0.5 mm)$^2$ = 0,2° | |

Novotechnik
Messwertaufnehmer OHG

Postfach 4220
73745 Ostfildern (Ruit)
Horbstraße 12
73760 Ostfildern (Ruit)

Telefon +49 711 44 89-0
Telefax +49 711 44 89-118
info@novotechnik.de
www.novotechnik.de



## Ordering specifications

**Preferred types printed in bold:**
- delivery time up to 25 pcs. within 10 working days
- no low volume surcharge

**Operating voltage Ub**
**2: Ub = 5 VDC (4.5 VDC ... 5.5 VDC)**

**Output signal range**
**1: 0.25 ... 4.75 V ratiometric to Ub**
2: 0.5 ... 4.5 V ratiometric to Ub

**Output characteristics**
**1: Rising slope cw**
**3: Two crossed outputs, output 1 rising cw, output 2 rising ccw**

**Electrical connection**
**401: lead wires 3 x 0.5 m (0.5 qmm), not redundant model 600**
**411: lead wires 4 x 0.5 m (0.5 qmm), redundant with shared supply model 700**
**421: lead wires 6 x 0.5 m (0.5 qmm), fully redundant model 700**
501: 3 soldering pins on housing bottom, not redundant model 600

R F A - 4 0 0 1 - 6 3 6 - 2 1 1 - 4 0 1

**Measuring range**
03: angle 0° ... 30° min.
...
**06, 12, 18, 24, 36**
...
36: angle 0° ... 360° max.

**Series**

**Mechanical specification**
**4001: Standard**

**Model**
**6: single output**
**7: redundant (2-channel versions)**

Order Code Example: RFA 4001 636 211 401: RFA4001 with 360° electrical angle, supply 5 V, output rising cw, range 0.25 ... 4.75 V, connection 3 lead wires
Order Code Example: RFA 4001 712 213 411: RFA4001 with 120° electrical angle, supply 5 V, output 1 rising cw / output 2 rising ccw, range 0.45 ... 4.75 V, connection 4 lead wires, redundant output with shared supply lines

## Required accessories

Position marker Z-RFC-P03, Art.No. 005658;
Position marker Z-RFC-P04, Art.No. 005659;
Position marker Z-RFC-P23, Art.No. 056074
(further position markers see separate data sheet Position-marker_rotary)

## Recommended accessories

Process-controlled indicators MAP... with display.

## Available on request

Cable versions
Customized connectors
Specific angle ranges / characteristics
SPI or PWM interface
Other interfaces